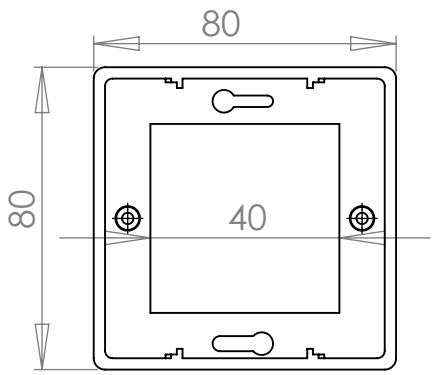



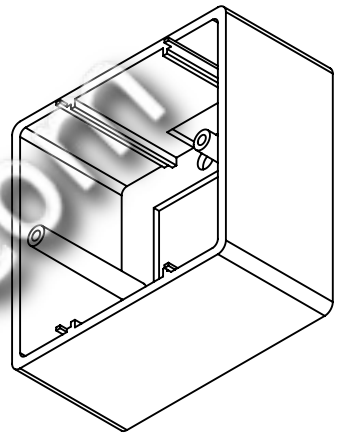

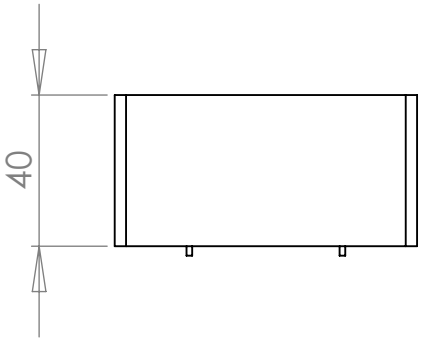

Caja Superficie 80 x 80 x 40

Plastico Auto extinguible V0
Cumple la normativa UL94
Color del plastico Blanco RAL 9003

www.tiendamat.com

		UNLESS OTHERWISE SPECIFIED:		NAME	DATE
		DIMENSIONS ARE IN INCHES TOLERANCES: FRACTIONAL ± ANGULAR: MACH ± BEND ± TWO PLACE DECIMAL ± THREE PLACE DECIMAL ±	DRAWN		
		INTERPRET GEOMETRIC TOLERANCING PER:			
		MATERIAL : ABS V0 auto extinguibles clase según norma UL 94, libres de halógenos			
NEXT ASSY	USED ON	FINISH			
APPLICATION		DO NOT SCALE DRAWING			

Caja Superficie 80 x 80 x 40

SIZE	DWG. NO.	REV
A		

SCALE: 1:2	WEIGHT:	SHEET 1 OF 1

5 4 3 2 1